Operation Manual

Clamping nut, mechanical

Types: 2275-xxx
2276-xxx
2277-xxx

Hilma-Römheld GmbH
Schützenstraße 74
57271 Hilchenbach
Germany
Phone: +49-2733/281-0
Fax: +49-2733/281-113
E-Mail: info@hilma.de
www.roemheld-gruppe.de

Contents

1.0 General information, safety instructions and manufacturer's declaration
1.1 General
1.2 Area of application
1.3 Operating characteristics
1.4 Temperatures
1.5 Important hazard warnings
1.6 Declaration of incorporation
1.7 Warranty

2.0 Structure and function
2.1 Structure
2.2 Function description
2.3 Interpretation of the clamping nut size
2.4 Checking the screw-in depth

3.0 Technical data, main dimensions

4.0 Assembly, installation and start-up
4.1 Assembly
4.2 Start-up

5.0 Troubleshooting

6.0 Maintenance and repair

7.0 Technical annex
7.1 Graphic representation

In order to ensure safe and functional operation, be sure to have read and understood this operation manual before installation and start-up!

1 Safety instructions

1.1 General

Hilma-Römheld clamping nuts are safety-tested and approved for use in accordance with the technical specifications. Non-adherence to these specifications may result in danger to the operator and/or malfunctions of the machine. For reasons of safety, unauthorised conversions or modifications of Hilma-Römheld clamping nuts are prohibited and will invalidate the warranty.

1.2 Area of application

Hilma-Römheld clamping nuts are intended for use on presses or similar machines and devices.

1.3 Operating characteristics

The maximum specified loads of the Hilma Römheld clamping nuts must not be exceeded (see catalogue for product group 6).

Caution: Subjecting the clamping nuts to excessive loads can result in their destruction
Persons can be endangered if clamping elements fail!

1.4 Temperatures

The maximum operating temperature for the standard model is 200 °C. For higher temperatures, special models must be used (max. temp. 400 °C).

1.5 Hazard warnings

- The clamping nuts must be carefully set in the clamping position before the clamping force is initiated, beware of risk of crushing
- **The tie rod must be adjusted to the correct clamping dimension prior to start-up,**
- When clamping, the tie rod must always be vertical in relation to the clamping point, so that the clamping and operating force can be properly absorbed and passed on,
- Clamping at an angle will lead to partial overloading of the clamping point and clamping element, which in turn will result in plastic material deformation,
- Do not exceed the rated clamping force in operation (take account of retraction forces),
- Observe the tightening torque to achieve the clamping force in accordance with the table,
- When clamping for longer durations, the clamping force must be checked once per week,

The operator must be appropriately instructed before operating the clamping elements for the first time. The clamping elements must not be operated by persons under the age of 16. Apprentices over the age of 16 may operate the elements, but only under supervision. The operation manual must be made available to the operator. The operator must inform third parties about possible hazards in the working area.

1.6 Declaration of incorporation

Hilma clamping nuts have been developed, designed and produced in compliance with the EC Machinery Directive 2006/42/EC (see also Annex).

1.7 Warranty

Our warranty lasts 24 months from time of delivery when used as intended in single-shift operation or for a maximum of 10,000 clamping cycles.

2 Structure and function

2.1 Structure

The main design feature of the mechanical power clamping nuts is an integrated planetary gear for additional power. The clamping nut is a robust and flexible clamping element which enables high clamping forces with simple manual operation and maximum operating safety. The clamping nuts have sufficient anti-corrosion protection for most applications. If required by the operating conditions, a special, sealed version of the nut is available, with additional surface protection of the casing.

2.2 Function description

Function: After manually adjusting the clamping nut up to the contact surface, the drive pinion of the planetary gear is engaged by turning the hexagonal spigot "SW1". In both the adjusting and clamping actions, the rotational direction of the hexagonal spigot corresponds to the pitch sense of the thread (e.g. turn to the right on a right-hand thread). Right-hand threads are used as standard; left-hand threads (e.g. for use on rotating shafts) are also available as a special version. The transmission ratio provides multiple torque amplification which is then transmitted to the actual nut with blind hole thread. The rotation of the nut causes the clamping stroke for the screwed-in T-bolt. The clamping force is safely applied depending on the operating torque.

2.3 Interpretation of the clamping nut size

The main criteria for selecting a power clamping nut are the required clamping force and the thread size.
The **rated clamping force** of the clamping nut is the force generated at the specified tightening torque via the planetary gear and transferred to the threaded bolt (=pre-load force). After the actual clamping operation, however, additional loads may occur in the form of operating forces (e.g. tool weights, cutting loads) which subject the threaded bolt and clamping nut to additional tension. The **maximum permissible static load** which the clamping nut and/or threaded bolt has to withstand without failure is therefore higher and can be several times the value of the rated clamping force.

2.4 Checking the screw-in depth

The **minimum screw-in depth "t_{min}"** is necessary **in order to safely transfer the clamping force**.
The maximum screw-in depth must never be exceeded, because if the threaded bolt is too long in the blind hole, it will activate the clamping nut before the required clamping force is applied.
The clamping nut casing has two **check marks (ring grooves)** which show the **minimum and maximum permissible scree-in depth (t_{min} / t_{max}) of the threaded bolt**.
Several criteria have to be considered when determining the screw-in depth "t" or approach stroke "s":

- Are the parts deformed (e.g. sagged) so that they do not lie flatly on each other and become aligned or "set aright" once the clamping force is applied?
- Are the components to be subjected to the force very elastic, so that they will yield drastically (stretch or compress) when under clamping force?
- Are there several joints, meaning that there may be an accumulated setting of the parts?
- Does the threaded bolt still have axial play until it makes contact with the parts to be clamped (e.g. with T-slots)?
- A further criterion is the length of the threaded bolt itself, as the threaded bolt not only extends proportionally to the clamping force but also proportionally to its own length; i.e. with the same tensile force, a longer bolt will become longer by more than a shorter bolt.

A clamping stroke "s" up to 1 mm is taken into account at the marking for the maximum screw-in depth (t_{max} = s_{min}). However, if the entire system is more yielding due to the reasons mentioned above, the screw-in depth must be reduced.
For the screw-in depth "t", we recommend choosing the mean value between the two markings.

Caution: if an incorrect tie rod length is selected, the tie rod will collide with the base of the threaded hole and no clamping force will be built up at the clamping point.

3 Technical data, main dimensions

Clamping nut			Tightening torque			
Clamping force / at tightening torque	Type 2275	60 kN	M12/20 Nm	M16/25 Nm	M20/30 Nm	
Clamping force / at tightening torque	Type 2276	100 kN	M16/35 Nm	M20/24Nm	M24/45 Nm	M30/50 Nm
Clamping force / at tightening torque	Type 2277	150 kN	M24/60 Nm	M30/70 Nm	M36/75 Nm	M42/80 Nm

4 Assembly, installation, start-up

4.1 Storage and transport

During transport, safeguard clamping elements against mechanical damage and, whenever possible, only store in enclosed, dry spaces. In the event of short-term outdoor storage, protect against all environmental influences that may cause damage.

4.2 Start-up

Read the operation manual before using the product for the first time.
- Check hydraulic clamping nuts for leaking oil,
- Screw in the tie rod, observing the minimum screw-in depth **(in clamping position, the tie rod must protrude at least 1 mm above the clamping element),**
- Bring the element into the clamping position and carefully pre-load it by hand or using a hook wrench,
- Using a preset torque wrench or a conventional hex key in the case of the version with clamping force display, build up the clamping force via the rotary pistons,

Caution: The clamping nut must be vertical in relation to the clamping point.

CAUTION: To avoid injury, only hold the element by the outer edge when bringing the clamping nut into clamping position.
RISK OF CRUSHING!

5 Troubleshooting

Hilma clamping nuts leave our company in good order and condition. All functions are checked and the necessary settings made. Should any malfunctions occur after observing the notes in chapter 4.0 (Assembly, installation and start-up), please use the following table to check the possible causes:

Fault	Possible causes	Measures
No clamping force is built up	- Clamping bolt too long	- Check the length of the clamping bolt with the aid of the markings on the nut
	- Clamping bolt too short	- The thread may have been damaged due to the screw-in depth being too small. Return the element to Hilma for repair
	- Tightening torque incorrect	- Incorrect torque set on the torque wrench, check the gauge

6 Maintenance and repair

Generally speaking, clamping nuts do not require any special maintenance. It is recommended to check the clamping nut for visible damage before every clamping operation. In the event of high dirt levels, the hydraulic clamping nut must be cleaned at regular intervals.

For start-up, observe the notes in chapter 4.0 (Assembly, installation and start-up).

7 Technical annex

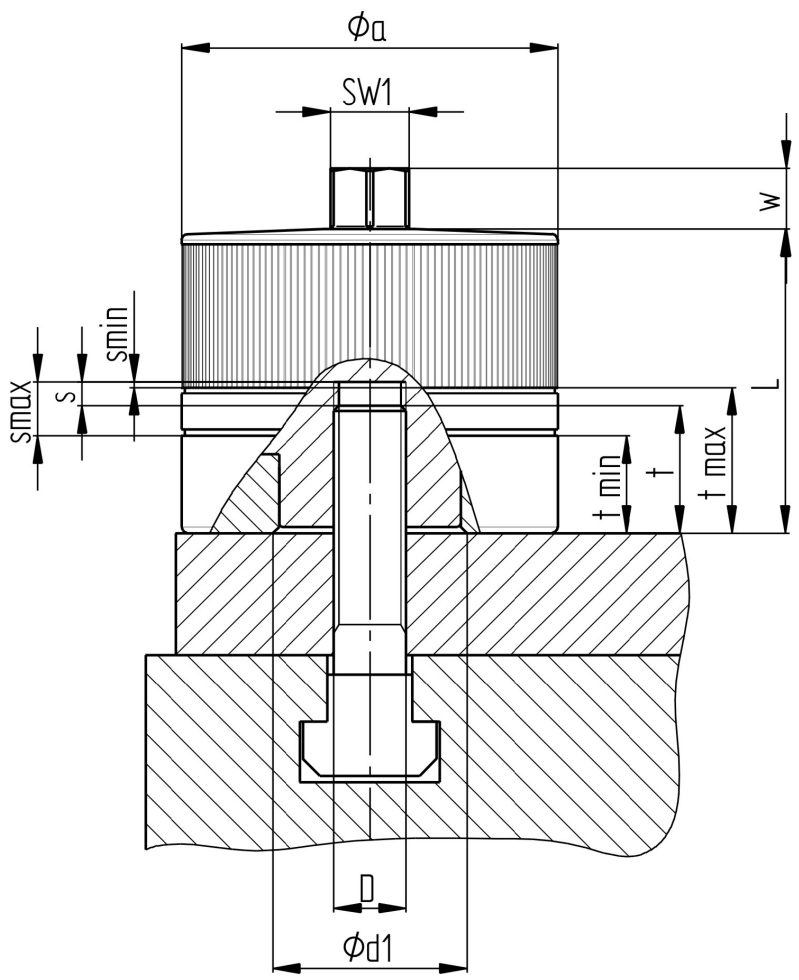

T-Nut DIN 650 [mm]	**18**	**22**	**28**	**36**	**42**	**42**
Spannkraft [kN]	**60**	**60**	**100**	**150**	**150**	**200**
Anzugsmoment [Nm]	25	30	45	70	75	90
D [mm]	M 16	M 20	M 24	M 30	M 36	M 36
a [mm]	62	62	73	83	83	120
d1 [mm]	32	32	42	52	52	82
d2 [mm]	60	60	71	81	81	118
l [mm]	50	50	70	75	75	80
t [mm]	24	24	35	40	40	45
SW 1 [mm]	13	13	15	17	17	19
Einschraubtiefe min. [mm]	16	16	25	30	30	35
Einschraubtiefe max. [mm]	24	24	35	40	40	45
Spannmutter, mit T-Nutenschraube Bestell-Nr.	**2275 816**	**2275 820**	**2276 824**	**2277 830**	**2277 836**	**2278 836**
Masse ca. [kg]	2,0	2,1	3,2	5,5	6,5	6,5
Spannmutter separat, (ohne T-Nutenschraube) Bestell-Nr.	**2275 716**	**2275 720**	**2276 724**	**2277 730**	**2277 736**	**2278 736**
Masse ca. [kg]	0,9	0,85	1,7	2,2	2,1	4,6

Declaration of incorporation

as per

Machinery Directive EC-RL 2006/42/EC
dated June 9, 2006.

We, **Hilma- Römheld**
Schützenstraße 74
D-57271 Hilchenbach, declare, that the incomplete machine and its variants:

Clamping nut, mechanical
Type: 2275-xxx
2276-xxx
2277-xxx

as supplied by us has been specifically designed for incorporation into a machine, taking full account of DIN EN ISO 12100 and 13857. The documentation has been prepared in conformity with appendix VII B. If required, the national authority may receive the documentation as a hard copy by post or by e-mail as a PDF format file. The machine into which the parts are to be integrated must only be put into operation after the conformity of the machine with the above EC directive has been demonstrated.
The design of our products is in accordance with EN 60204-1.

Responsible for the document:
Nils Kolb
Schützenstraße 74
D-57271 Hilchenbach

Hilchenbach, September, 2017
H.- J. Molka
Managing Director